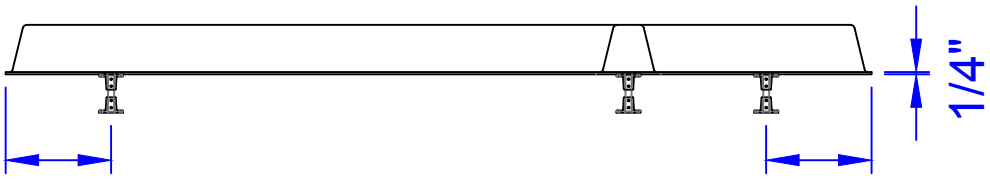

Side View

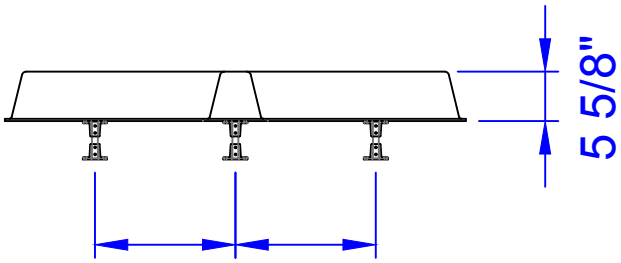

Top View

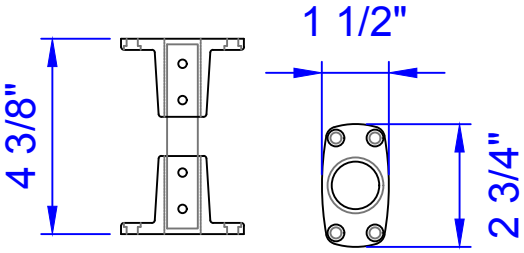

Wall Cross Mounting Bracket

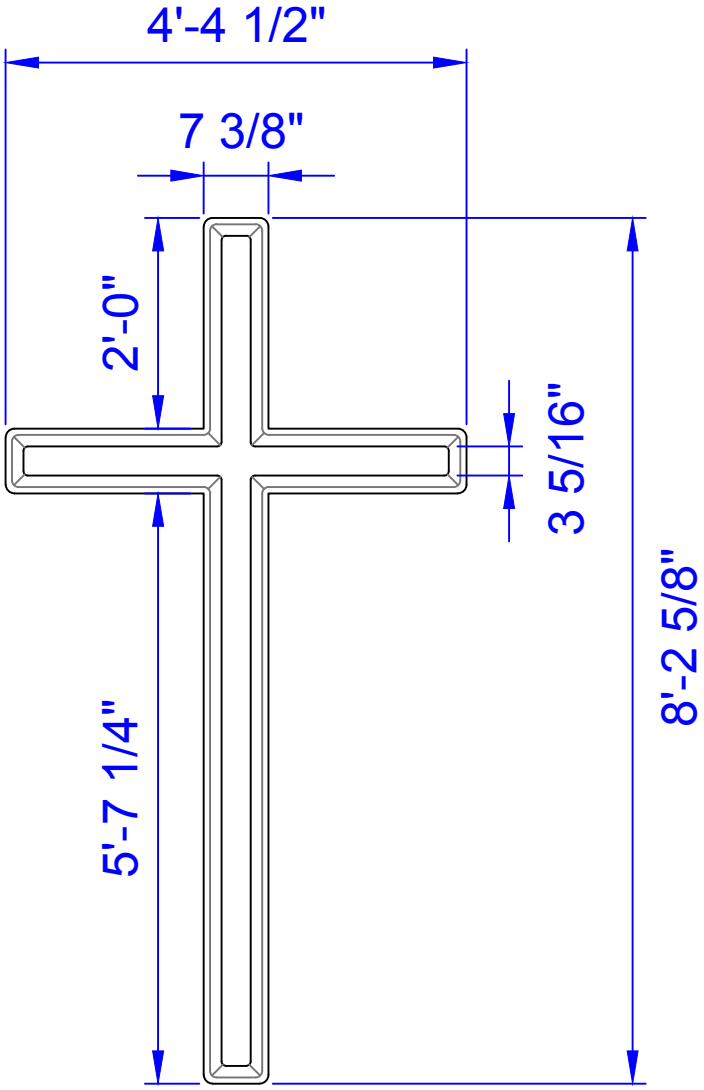

Front View

Wall Cross Data
Overall Width = 4'-4 1/2"
Overall Length = 8'-2 5/8"
Overall Height = 5 5/8"

Standard Color
White

Premium Colors
Gold
Copper
Note: Color samples available at customers request

Available Options
Factory Installed Backlighting

PIEDMONT COMPOSITES & TOOLING
33 Lewittes Rd.
Taylorsville, NC 28681
Phone: 828-632-8883
Fax: 828-632-5585
www.piedmontcomposites.com

WALL-CROSS

Model : 8-C

Scale: N/A
Drawn by: K.SHERRILL
Created On -
Updated On 06/26/19